SNIPER M2
Specialty Coffee Roasters

1600W Power | 304 Stainless Steel | Plug to roast | Independent Cooling System

Why choose us

10 features for Kaleido Roaster

Patented bean drum

Patented sample collector

Automatic chaff collection

Small size and large capacity

Temperature profile

Double guarantee

Carbon fiber infrared direct fire + hot air

Low energy consumption and high heating power

Quiet roasting

High speed smoke exhaust

PRODUCT PARAMETERS

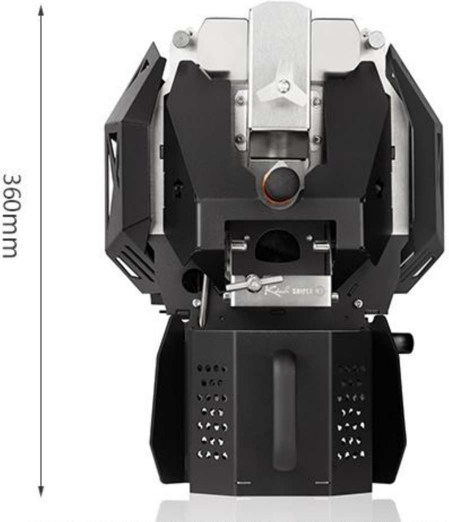

The machine is manually measured, 1-2cm error ir unavailable.
Thanks for your understanding!

Brand	Kaleido®	Model	**Sniper M2**
Roasting capacity	**50-300g，max400g**	Heating	**electric heating**
Power	**1600W**	Voltage	**Global voltage 100V-240V**
Heating up function	**instant high temperature without delay**	Roasting time	**4-10 minutes**
Sampling observation	Patent **horizontal sample collector**	Drum	Patent **304 stainless steel Drum**
Coffee collection	Patent **automatic collection of chaff**	Cooling	**2-3 minutes rapid cooling**

Operating system

1.Kaleido Software 2.Artisan Software
3.Kaleido + Artisan Software
(We have become an official sponsor of artisan software!)

Fine adjustment of Burner, Air and Drum

Appearance	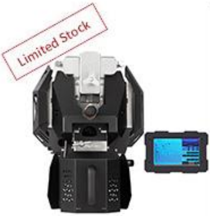 Limited Stock	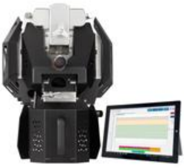	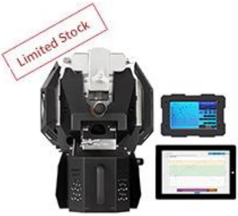 Limited Stock
Model	**M2 Standard**	**M2Pro**	**M2 Dual system**
System	Kaleido	Artisan	Kaleido and Artisan
Bluetooth Connection	—	✓	✓
Touchscreen Panel	✓	—	✓
Intelligent Module	✓	—	✓
Artisan Module	—	✓	✓
Manual Duplicated Curve Roasting	✓	✓	✓
USB Connection	Touchscreen Panel	Computer or Tablet PC	Touchscreen Panel
Advantages	Save and duplicate curve Manual and Automatic Roasting	Save and duplicate curve Manual and Automatic Roasting	Save and duplicate curve Manual and Automatic Roasting

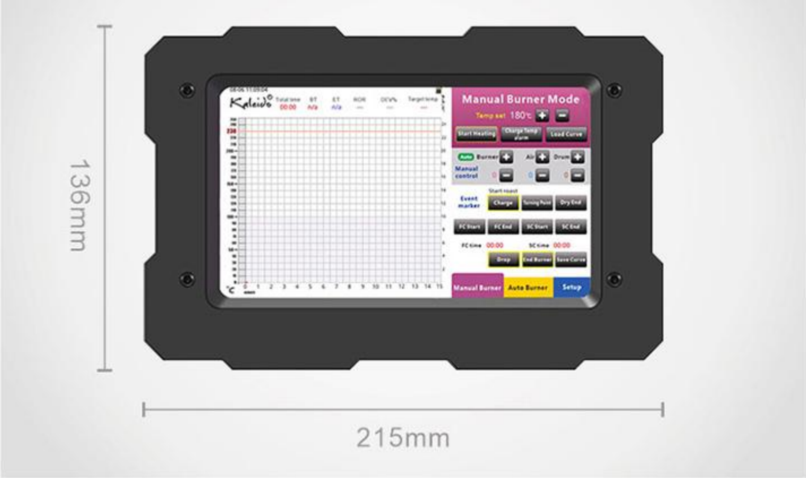
136mm
215mm
Kaleido
Total time
BT
ET
ROR
DEV%
Target temp
Manual Burner Mode
Temp set 180℃
Start Heating
Charge Temp alarm
Load Curve
Auto
Burner
Air
Drum
Manual control
Start roast
Event marker
Charge
Turning Point
Dry End
FC Start
FC End
SC Start
SC End
FC time 00:00
SC time 00:00
Drop
End Burner
Save Curve
Manual Burner
Auto Burner
Setup

7” Touchscreen Panel

QUICK RESPONSE ROR DATA AND REAL-TIME RECORDED CURVES

MANUAL & AUTOMATIC ROASTING. BUILT-IN SD CARD TO STORE ROASTING CURVES

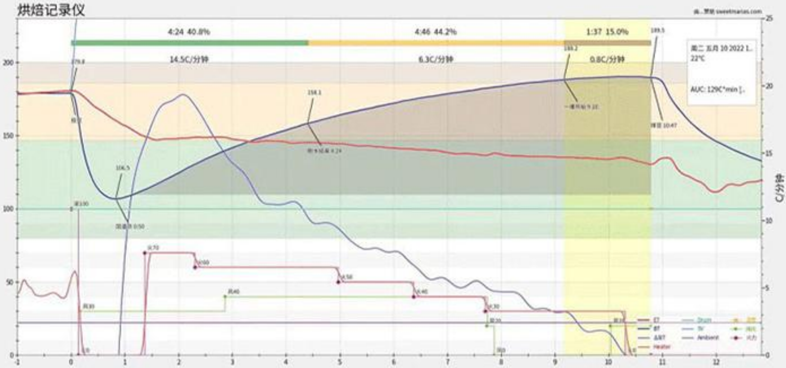

Rapidly reacting probes and stable energy supply make green beans evenly heated inside and outside and produce unique flavor and aroma.

M2 STRUCTURE ANALYSIS DIAGRAM

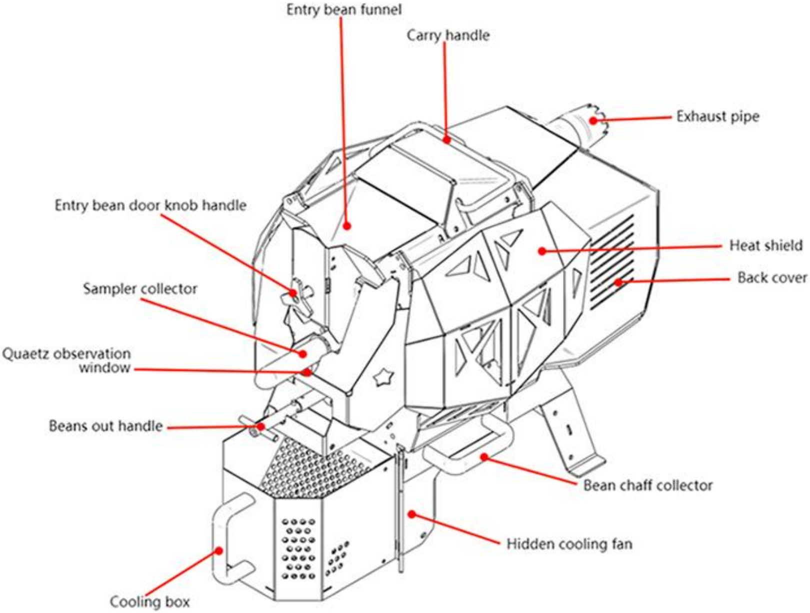
Entry bean funnel
Carry handle
Exhaust pipe
Entry bean door knob handle
Heat shield
Back cover
Sampler collector
Quaetz observation window
Beans out handle
Bean chaff collector
Hidden cooling fan
Cooling box

Inlet Air To Hot Air(Surrounding Hot Air) Schematic Diagram

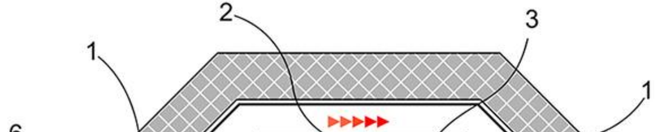

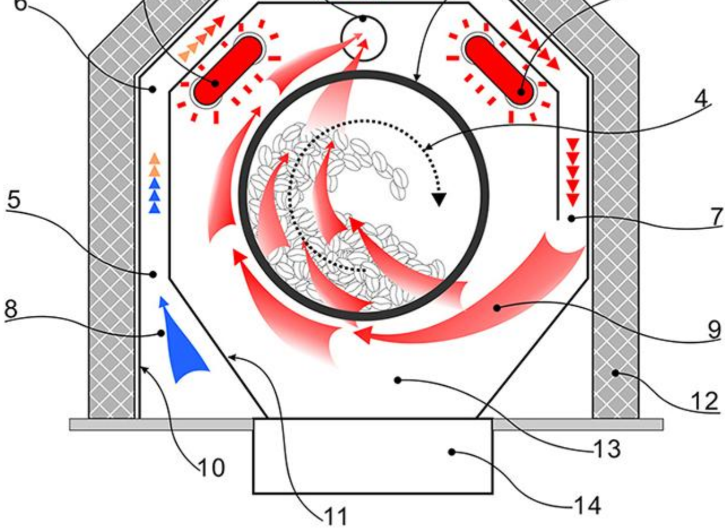
6
4
5
7
8
9
12
13
10
14
11

1. Heating elements
2. Exhaust pipe
3. Bean drum
4. Bean drum rotation direction
5. Cold air intake
6. Convert cold air into hot air
7. Hot air outlet
8. Cold air
9. Hot air
10. Metal hot air channel outer wall
11. Metal hot air channel interior wall
12. External insulation layer
13. Interior of the roaster
14. Coffee bean chaff colletor

SURROUNDED HOT AIR

NEW

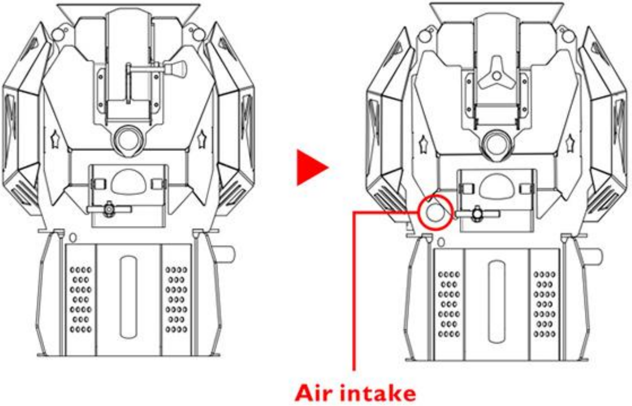

In order to increase the surround hot air. The new M2/6/10 has a separate air intake and a new heat storage design. The cold air is indirectly heated by infrared through an independent channel and then sent to the external environment of the bean drum, making the pure hot air wrap the bean drum, which not only improves heat retention, but also avoids exhaust gas circulation, making the roasted coffee beans taste more pure. The tightness of the fuselage is greatly improved, and the bean drum is also redesigned, and the front panel has also been changed to a more airtight three-layer design, and the number of times for bean turns in the Drum is increased by 30%, and the thermal contact conduction is also increased, which greatly reduces the burning of beans and the production of impact craters.

ENTRY BEAN DOOR UPGRADE

NEW

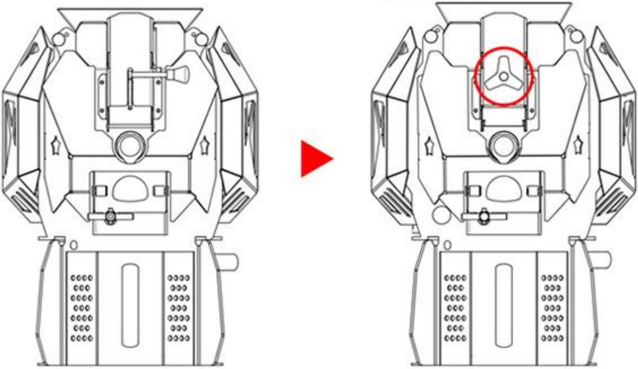

The average thickness and weight of the front panel are doubled compared with the old version, and the Heat insulation and storage can be better. The Entry bean door is upgraded with knob handles that automatically close the door. The heat insulation sealing effect of the inlet is better.

Declaration: Patent and image copyright, legal protection, do not infringe

Upgraded Pressurized Smoke Vent Working Principle

2019-2022（Older versions of the exhaust pipe）

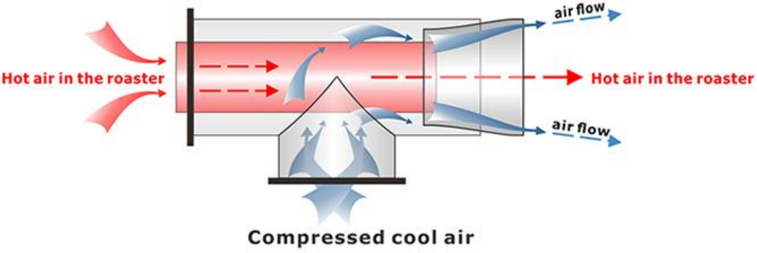
air flow
Hot air in the roaster
Hot air in the roaster
air flow
Compressed cool air

OLD VERSION

The airflow generated by compressed air, since there is no aggregation, directly and gradually dissipated extracting hot air is inefficient and if the exhaust is not good, the fan is easy to temporary demagnetization.

VS

2023 Upgraded Pressurized Exhaust Pipe

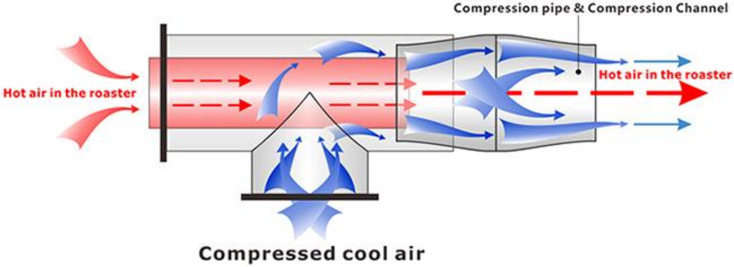
Compression pipe & Compression Channel
Hot air in the roaster
Hot air in the roaster
Compressed cool air

NEW VERSION

2023 new version of the exhaust pipe, using the principle of air compression, generating a powerful jet force to obtain greater pumping force, smoke effect is better, while solving the fan overheating demagnetization problem.

WHOLE HEARTED

Roasting

quality
coffee
at
home

Kaleido® SNIPER M2

Quiet operation

Sound below 58dB

Keep quiet and comfortable

Kaleido
SNIPER M2

Precise control of roasting results

The Sniper M2 roaster allows you to precisely control the roasting effect in many aspects, including probe temperature measurement, beans watching and beans out, bringing you a good roasting experience.

Quality shows in the details

Sniper M2 redefines fresh roasting
We continue to innovate and disrupt, just for a good cup of coffee

Cooling fans

Dual cooling fans,
strong extraction 2-3 minutes
rapid cooling Quickly lock in
the coffee flavor

High quality PCB circuit board

International wide voltage design Global use, double safety protection

Sample Collector

Check the color of beans any time

METICULOUS WORKMANSHIP

▲

BEAN-IN AREA

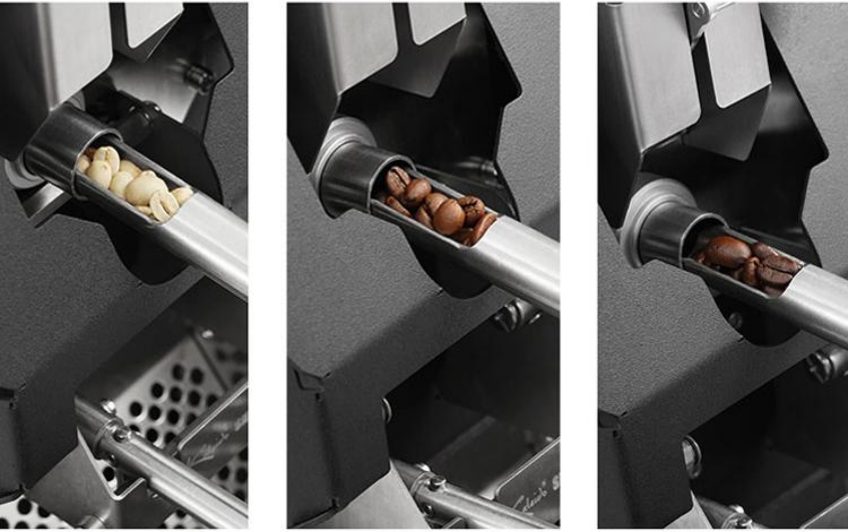

▲

SAMPLE COLLECTOR

▲

AUTOMATIC CHAFF COLLECTION

304 armor high precision probe

Double probe temperature measurement, instantly converted to temperature curve

Screw-free self-locking probe holder, easy to adjust the probe depth

▲

ADJUSTABLE PROBE

HIGH TEMPERATURE RESISTANT QUARTZ OBSERVATION WINDOW

SNIPER M2
7E3-B/021

EXCELLENT MATERIAL

85% STAINLESS STEEL, 15% OTHER MATERIALS

ONE-YEAR WARRANTY

ONE-ON-ONE SERVICE

FREE ACCESSORIES WITHIN THE WARRANTY

Easy roasting with high quality beyond imagination

Colombia
Green Coffee Beans

Mandeling
Green Coffee Beans

Colombia
Roasting Test

Mandeling
Roasting Test

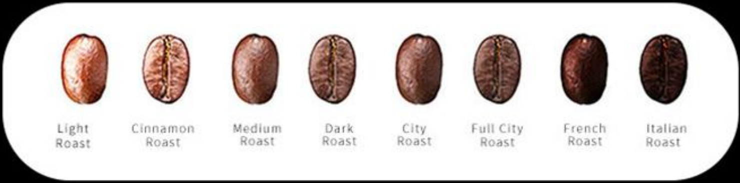
Light Roast
Cinnamon Roast
Medium Roast
Dark Roast
City Roast
Full City Roast
French Roast
Italian Roast

Multiple roasting curves to choose and explore one you love

SNIPER M2 REDEFINES FRESH MICRO-ROASTING

MANY POWERFUL PATENTED BLACK TECHNOLOGIES LEADS
THE NEW TREND OF COFFEE MICRO-ROASTING

ROASTING QUALITY BEYOND IMAGINATION

ROAST YOUR BEST COFFEE

INNOVATIVE ROASTING MODE AND TECHNOLOGICAL SUPPORT ENHANCE THE QUALITY OF ROASTING.

WE KEEP IMPROVING ROASTING PERFORMANCE. AFTER THOUSANDS OF REPEATED TESTS AND CONTINUOUS INVESTMENT, WE ARE THE FIRST IN ELECTRICAL ROASTING FIELD TO ACHIEVE THE INNOVATIVE BREAKTHROUGH OF LOW ENERGY CONSUMPTION AND HIGH QUALITY ROASTING

M2

WITH THE UNIQUE PENETRATING HEAT AND RAPID HEATING CAPACITY OF CARBON FIBER INFRARED, M2

CARBON FIBER HEATING WIRES

HIGH THERMAL EFFICIENCY: INSTANT HEATING WITHOUT HEATING DELAY
LOW ENERGY CONSUMPTION: ONLY 0.8KW. IT IS MORE ENERGY EFFICIENT THAN THE HOME HAIR DRYER .
ELECTRICITY TO HEAT: MORE THAN 95% CONVERSION RATE

MAKES COFFEE BEANS HOMOGENEOUS, FULLY SATISFYING YOUR SPECIAL ROASTING, EASILY GETTING YOUR FAVORITE ROASTING LEVEL AND FEELING THE UNIQUE FLAVOR OF DIFFERENT ROASTING STAGES!

IT CAN BE USED FOR MANY PURPOSES

AT HOME

ENJOYING FRESH COFFEE BEANS AT HOME

COFFEE SHOP

CUTTING COSTS AND BRING PROFITS

TRAINING

SHOWING THE
ROASTING PROCESS

PROOFING

PROOF TESTING
BEFORE MASS ROASTING

Kaleido
owns core super technology

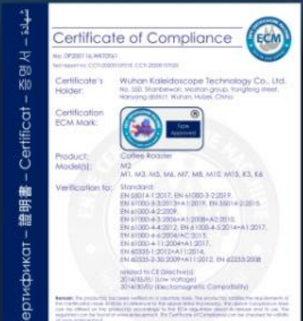

ертификат – 證明書 – Certificat – 증명서 – شهادة

Certificate of Compliance

Certificate's Holder: Wuhan Kaleidoscope Technology Co., Ltd.

Certification ECM Mark:

Product: Coffee Roaster
Model(s): M2
M1, M3, M5, M6, M7, M8, M10, M15, K3, K6

Verification to: Standard:
EN 55014-1:2017, EN 61000-3-2:2019,
EN 61000-4-2:2009,
EN 61000-4-4:2012, EN 61000-4-5:2014+A1:2017,
EN 61000-4-11:2004+A1:2017,

related to CE Directive(s):
2014/35/EU (Low Voltage)
2014/30/EU (Electromagnetic Compatibility)

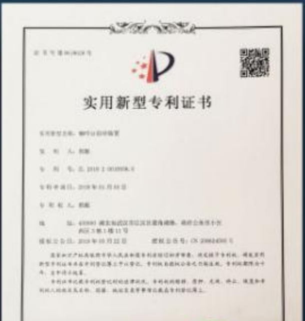

实用新型专利证书

Certificate – C
CE

Be faithful to our original aspiration and continue to marching forward

Each technological advancement is aimed at optimizing your sense of use and the best roasting experience

We constantly innovate and improve our technology for a good cup of coffee

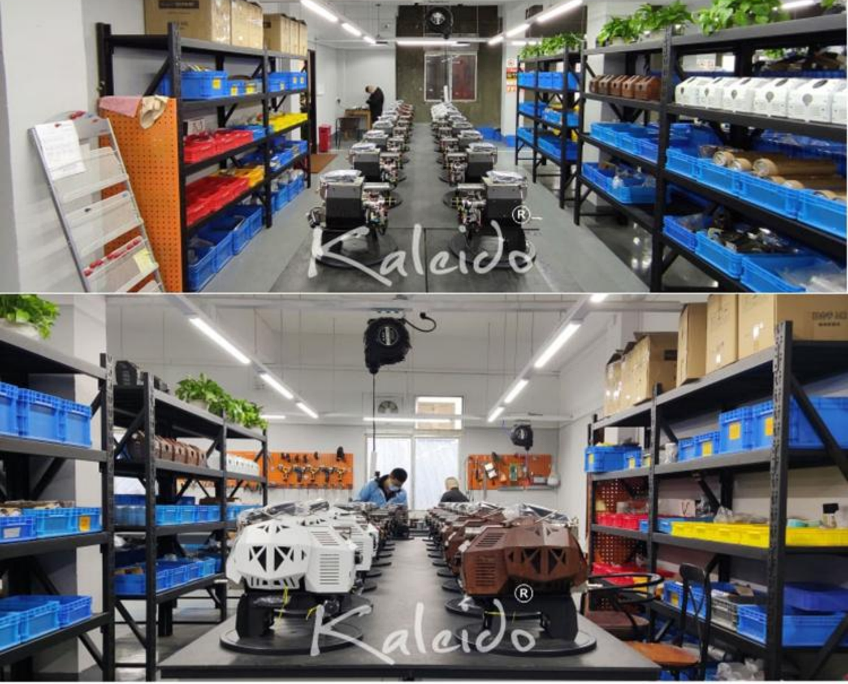
Kaleido®
Kaleido®

Kaleido® creates an infinite wonderful world with limited resources